## Make: SUBARU

## Model: Impreza (->10/00)

## Part Number: ADB3722

## Vehicle Manufacturing/Engine:

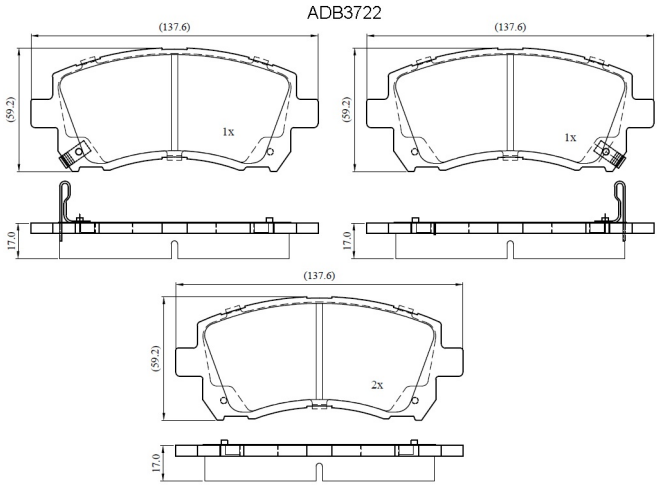


### Specifications

| | | |
|---|---|---|
| **Fitting Position** | : | Front |
| **Model Date** | : | 08/96-08/98 |
| **Or. Caliper** | : | Akebono |

| | | |
|---|---|---|
| **WVA** | : | 23558 |
| **FMSI** | : | |
| **Length** | : | 137.6 |
| **Width** | : | 59.2 |
| **Thickness** | : | 17 |