Make: SUBARU

Model: Impreza (->10/00)

Part Number: ADB3829

Vehicle Manufacturing/Engine:

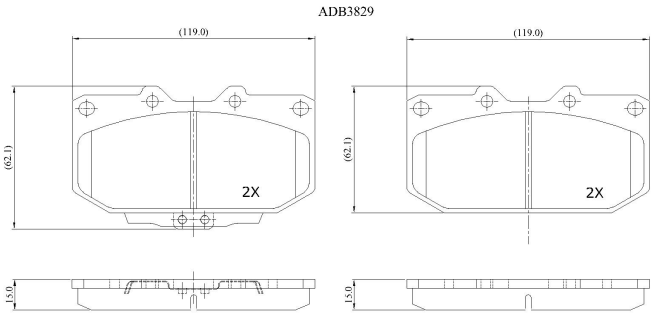

Specifications

Fitting Position	:	Front
Model Date	:	08/98-10/00
Or. Caliper	:	Sumitomo

WVA	:	21307
FMSI	:	
Length	:	119
Width	:	70.1/62.2
Thickness	:	15