Make: SUBARU

Model: Impreza (->10/00)

Part Number: ADB3840

Vehicle Manufacturing/Engine:

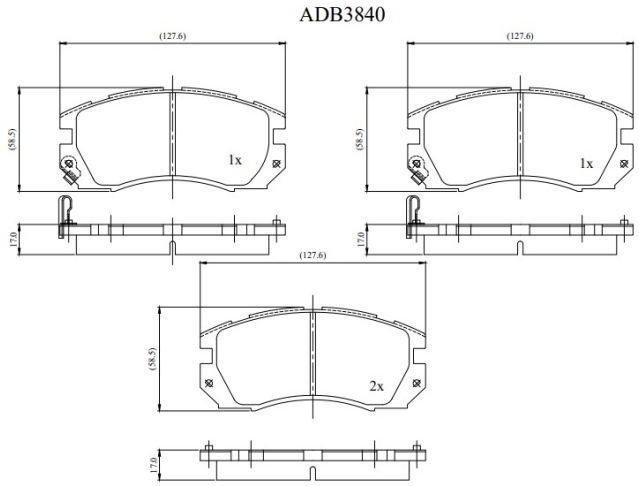

Specifications

Fitting Position	:	Front
Model Date	:	04/93-08/96
Or. Caliper	:	Akebono

WVA	:	21482
FMSI	:	
Length	:	127.6
Width	:	58.5
Thickness	:	17