Make: SUBARU

Model: Impreza

Part Number: ADB02615

Vehicle Manufacturing/Engine:

ADB02615

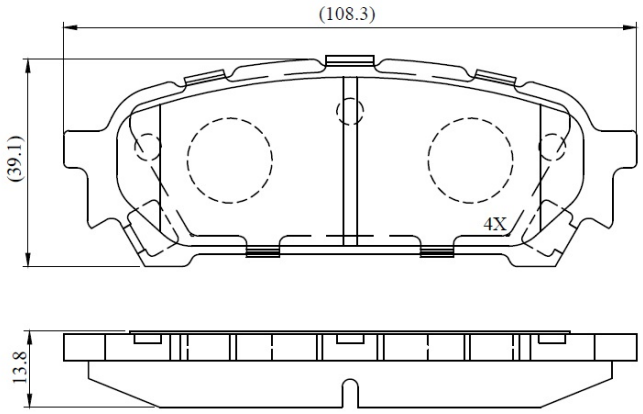

Specifications

Fitting Position	:	Rear
Model Date	:	03-Jul
Or. Caliper	:	
WVA	:	

FMSI	:	D1004
Length	:	108.3
Width	:	39.1
Thickness	:	13.8