Make: SUBARU

Model: L Series (Leone)

Part Number: ADB3399

Vehicle Manufacturing/Engine:

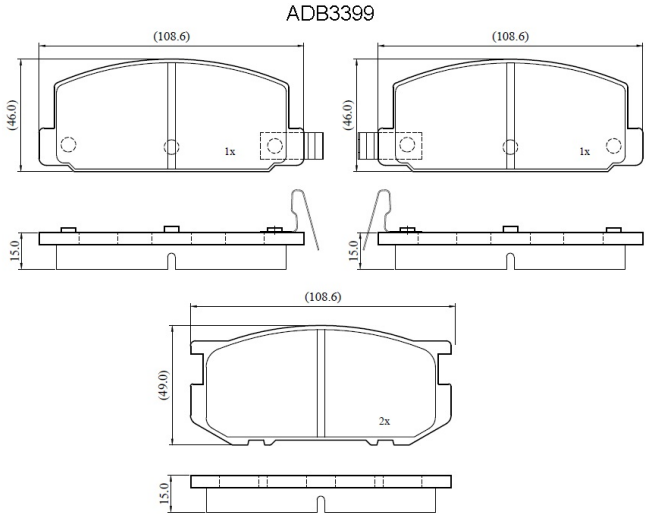

Specifications

Fitting Position	:	Front
Model Date	:	01/80-11/84
Or. Caliper	:	Akebono

WVA	:	20766
FMSI	:	
Length	:	108.6/106.85
Width	:	46.0/49.0
Thickness	:	15