Make: SUZUKI

Model: SX4 S-Cross

Part Number: ADB33197

Vehicle Manufacturing/Engine:

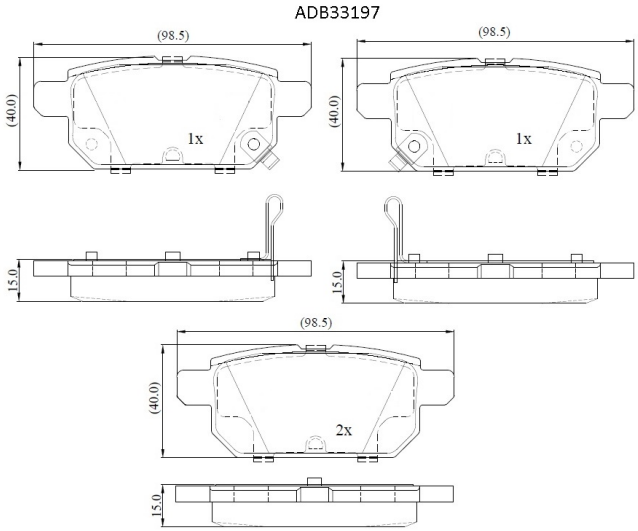

Specifications

Fitting Position	:	Rear
Model Date	:	2013-
Or. Caliper	:	

WVA	:	25258
FMSI	:	
Length	:	98.5
Width	:	40
Thickness	:	15