Make: TESLA

Model: MODEL S

Part Number: ADB36065

Vehicle Manufacturing/Engine:

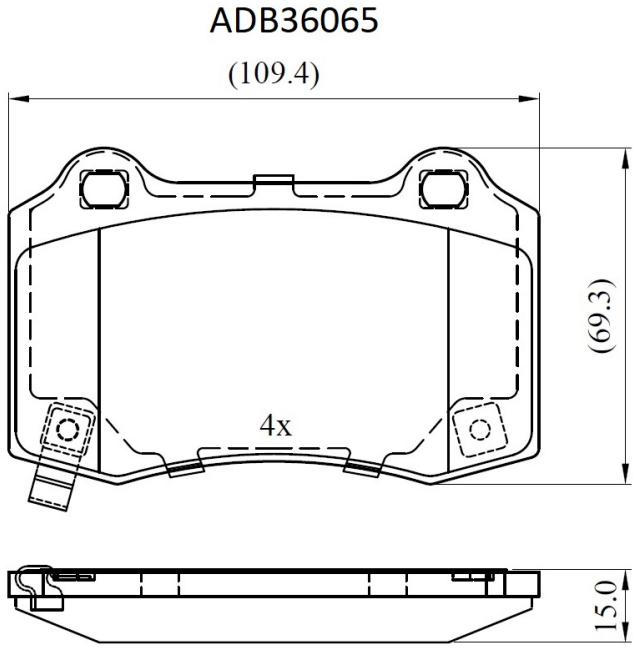

Specifications

Fitting Position	:	Rear

Model Date	:	2015-
Or. Caliper	:	
WVA	:	24076
FMSI	:	
Length	:	109.6
Width	:	69.1
Thickness	:	14.8