Make: TOYOTA

Model: 4 RUNNER II

Part Number: ADB33173

Vehicle Manufacturing/Engine:

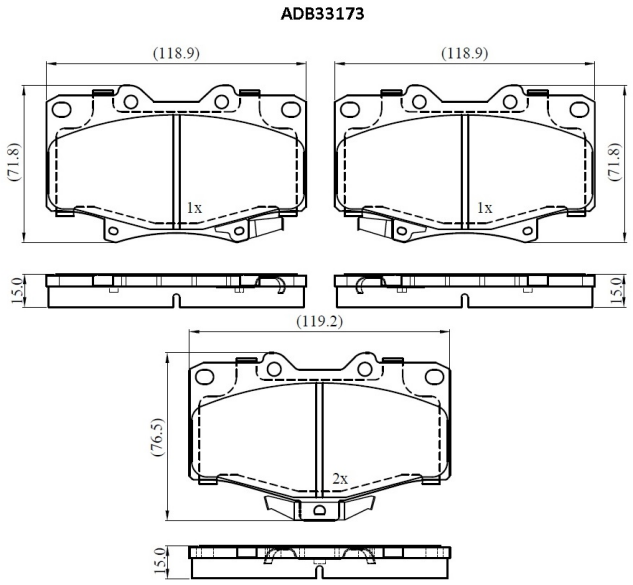

Specifications

Fitting Position	:	Front
Model Date	:	1989-1995

Or. Caliper	:	
WVA	:	2,16,80,21,679
FMSI	:	
Length	:	119
Width	:	67.7,73.7
Thickness	:	15