Make: TOYOTA

Model: Avensis (01/02->)

Part Number: ADB31141

Vehicle Manufacturing/Engine:

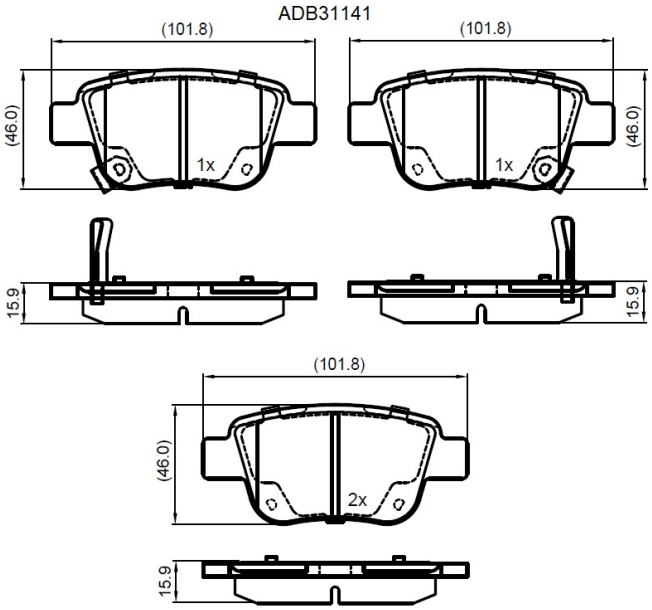

Specifications

Fitting Position	:	Rear
Model Date	:	01/02-->

Or. Caliper	:	Bosch
WVA	:	23620
FMSI	:	
Length	:	101.8
Width	:	46
Thickness	:	16.5