Make: TOYOTA

Model: Avensis Saloon

Part Number: ADB31799

Vehicle Manufacturing/Engine:

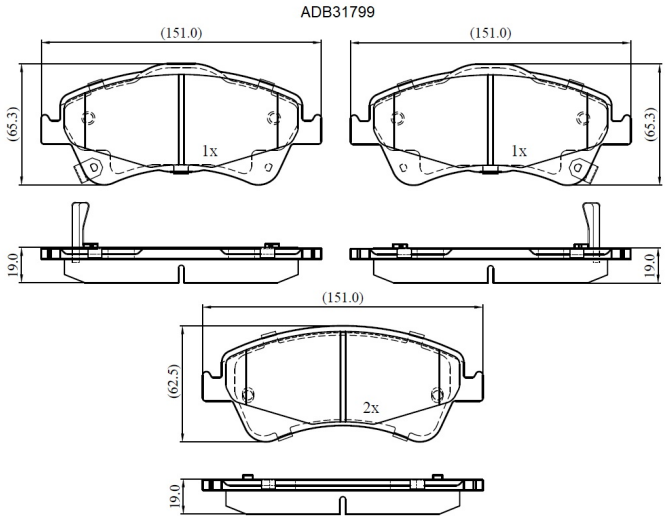

Specifications

Fitting Position	:	Front
Model Date	:	02/09-->
Or. Caliper	:	

WVA	:	2,42,04,24,691
FMSI	:	
Length	:	150.8
Width	:	62.2/65.8
Thickness	:	19