Make: TOYOTA

Model: C-HR

Part Number: ADB02460

Vehicle Manufacturing/Engine:

ADB02460

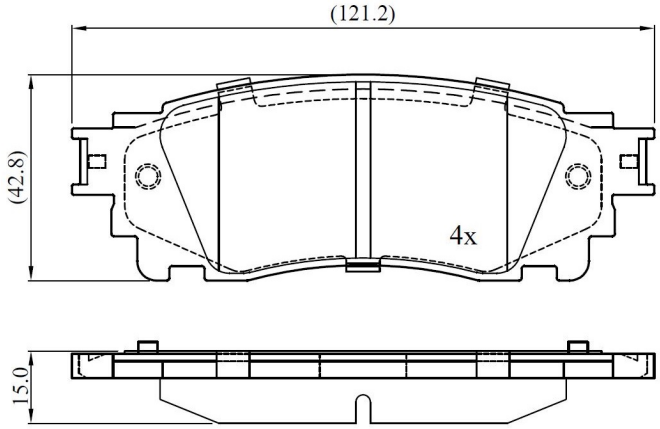

Specifications

Fitting Position	:	Rear
Model Date	:	2016-
Or. Caliper	:	
WVA	:	22153

FMSI	:	
Length	:	121.3
Width	:	42.8
Thickness	:	15