Make: TOYOTA

Model: Camry (10/94-> 08/01)

Part Number: ADB3458

Vehicle Manufacturing/Engine:

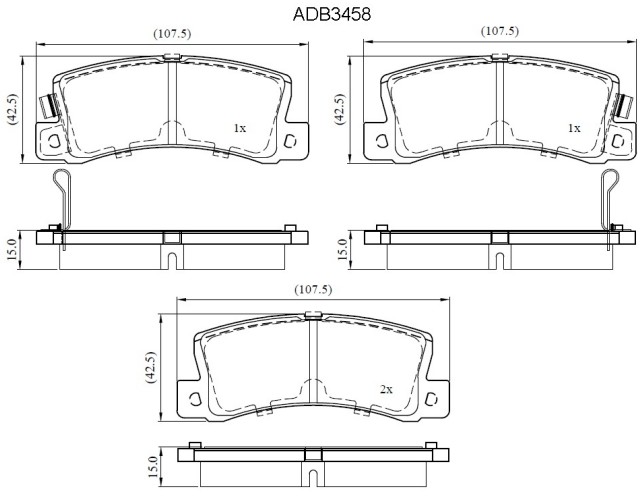

Specifications

Fitting Position	:	Rear
Model Date	:	10/94-08/01
Or. Caliper	:	Akebono

WVA	:	
FMSI	:	
Length	:	107.5
Width	:	42.5
Thickness	:	15