Make: TOYOTA

Model: COROLLA Hatchback

Part Number: ADB33299

Vehicle Manufacturing/Engine:

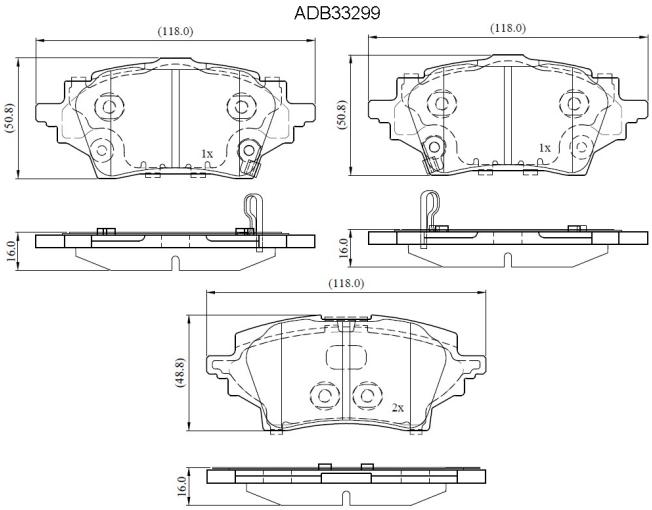

Specifications

Fitting Position	:	Rear
Model Date	:	2019-
Or. Caliper	:	

WVA	:	26,15,32,61,54,26,155
FMSI	:	
Length	:	118
Width	:	50.8
Thickness	:	15