Make: TOYOTA

Model: Hi-Ace (->89)

Part Number: ADB0297

Vehicle Manufacturing/Engine:

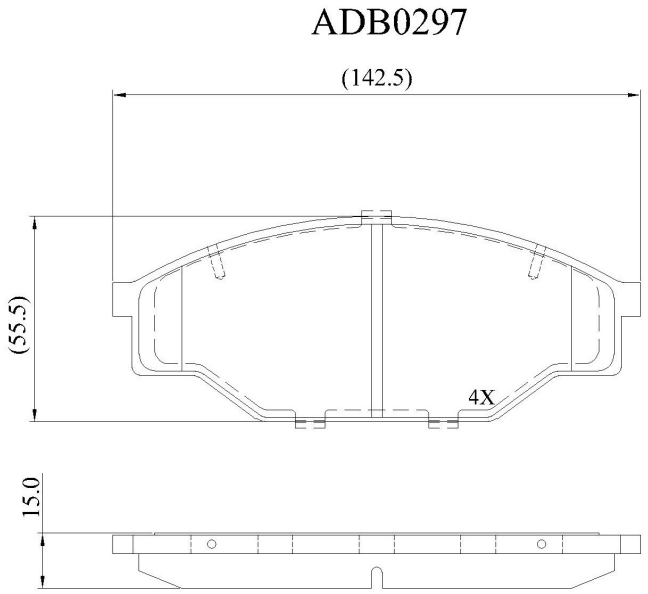

Specifications

Fitting Position	:	Front

Model Date	:	01/83-01/89
Or. Caliper	:	Akebono
WVA	:	21158
FMSI	:	
Length	:	142.5
Width	:	55.5
Thickness	:	15