Make: TOYOTA

Model: Previa (07/00->)

Part Number: ADB31133

Vehicle Manufacturing/Engine:

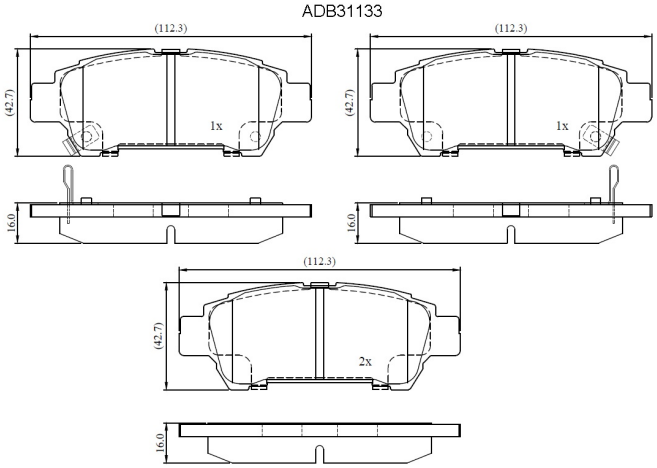

Specifications

Fitting Position	:	Rear
Model Date	:	07/00-->
Or. Caliper	:	Sumitomo
WVA	:	23646

FMSI	:	
Length	:	111.2
Width	:	42.7
Thickness	:	16