Make: TOYOTA

Model: RAV 4 V

Part Number: ADB02430

Vehicle Manufacturing/Engine:

ADB02430

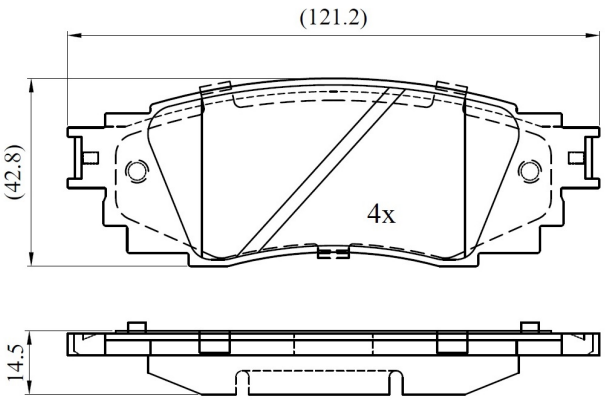

Specifications

Fitting Position	:	Rear
Model Date	:	2018-
Or. Caliper	:	

WVA	:	22434
FMSI	:	
Length	:	121.2
Width	:	42.9
Thickness	:	14.5