Make: VAUXHALL

Model: Agila MK II

Part Number: ADB32008

Vehicle Manufacturing/Engine:

ADB32008

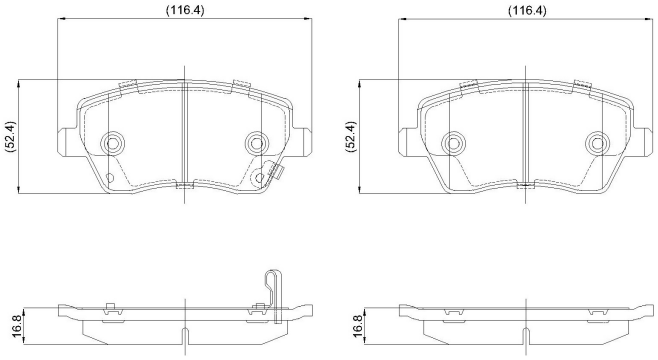

Specifications

Fitting Position	:	Front
Model Date	:	01/2008->11/2014
Or. Caliper	:	
WVA	:	23973, 24403

FMSI	:	
Length	:	116.6
Width	:	52.6
Thickness	:	16.8