## Make: VAUXHALL

## Model: Agila MK II

## Part Number: ADB32008

## Vehicle Manufacturing/Engine:

ADB32008

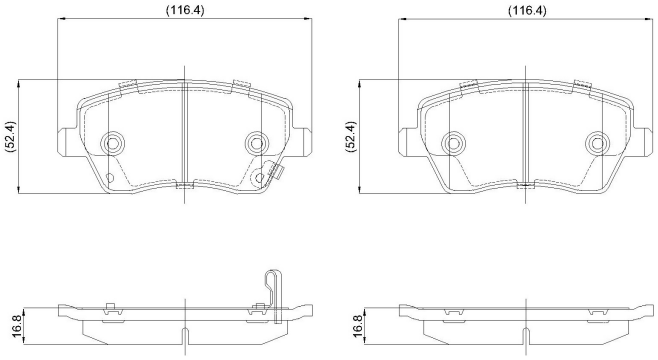


### Specifications

| | | |
|---|---|---|
| **Fitting Position** | : | Front |
| **Model Date** | : | 01/2008->11/2014 |
| **Or. Caliper** | : | |
| **WVA** | : | 23973, 24403 |

| | | |
|---|---|---|
| **FMSI** | : | |
| **Length** | : | 116.6 |
| **Width** | : | 52.6 |
| **Thickness** | : | 16.8 |