Make: VAUXHALL

Model: Astra (07/98->)

Part Number: ADB3583

Vehicle Manufacturing/Engine:

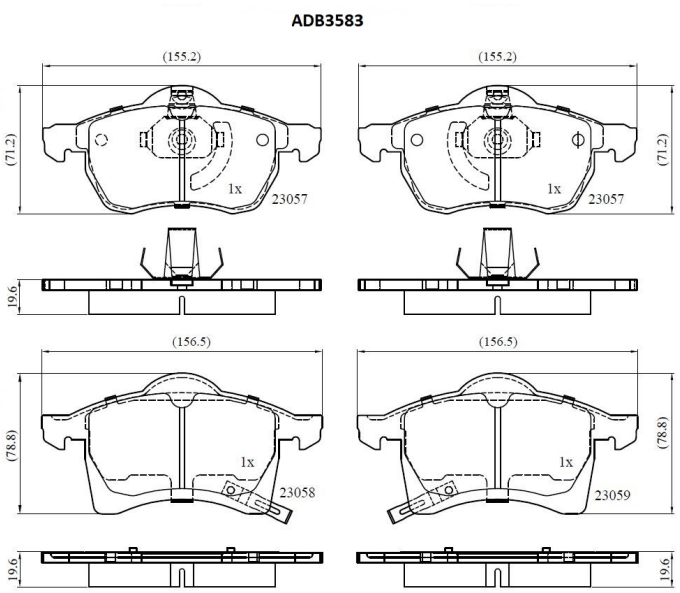

Specifications

Fitting Position	:	Front
Model Date	:	07/98->

Or. Caliper	:	Ate
WVA	:	2,31,16,23,060
FMSI	:	
Length	:	156.4/155.2
Width	:	78.6/71.2
Thickness	:	19.6