Make: VAUXHALL

Model: Astra MK V Estate

Part Number: ADB31551

Vehicle Manufacturing/Engine:

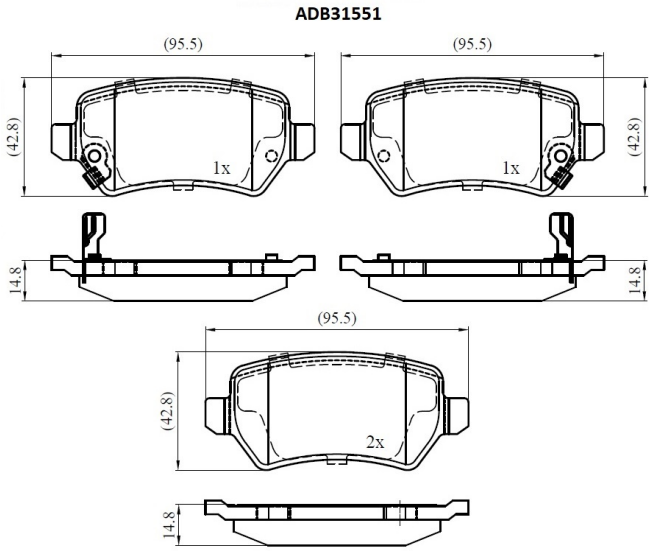

Specifications

Fitting Position	:	Rear
Model Date	:	08/04-->
Or. Caliper	:	Lucas

WVA	:	2,34,16,23,41,72,36,54,00,000
FMSI	:	
Length	:	95.5
Width	:	42.8
Thickness	:	14.8