Make: VAUXHALL

Model: Astra Mk VI Saloon

Part Number: ADB32038

Vehicle Manufacturing/Engine:

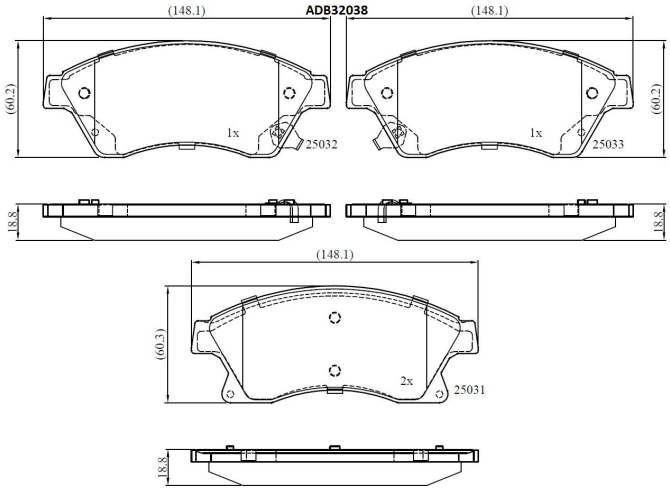

Specifications

Fitting Position	:	Front
Model Date	:	06/12-
Or. Caliper	:	Bosch
WVA	:	25031, 25032,25033

FMSI	:	
Length	:	148.1
Width	:	60.3
Thickness	:	18.8