Make: VAUXHALL

Model: Cavalier (10/91-96)

Part Number: ADB0117

Vehicle Manufacturing/Engine:

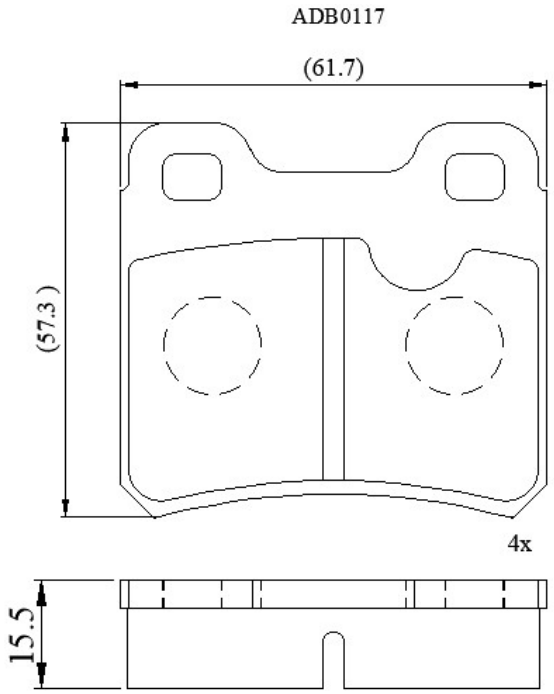

Specifications

Fitting Position	:	Rear
Model Date	:	01/92-10/95
Or. Caliper	:	Ate
WVA	:	21140
FMSI	:	
Length	:	61.7
Width	:	57.3
Thickness	:	15.5