Make: VAUXHALL

Model: MOKKA / MOKKA X

Part Number: ADB32436

Vehicle Manufacturing/Engine:

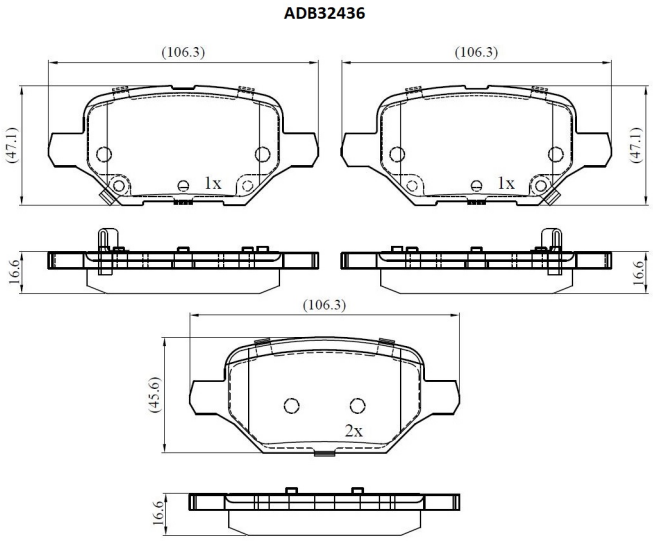

Specifications

Fitting Position	:	Rear
Model Date	:	2012-

Or. Caliper	:	
WVA	:	22,93,02,29,31,22,932
FMSI	:	
Length	:	106.4
Width	:	45.7,47.3
Thickness	:	17