Make: VAUXHALL

Model: Omega / Elite (94 ->)

Part Number: ADB0493

Vehicle Manufacturing/Engine:

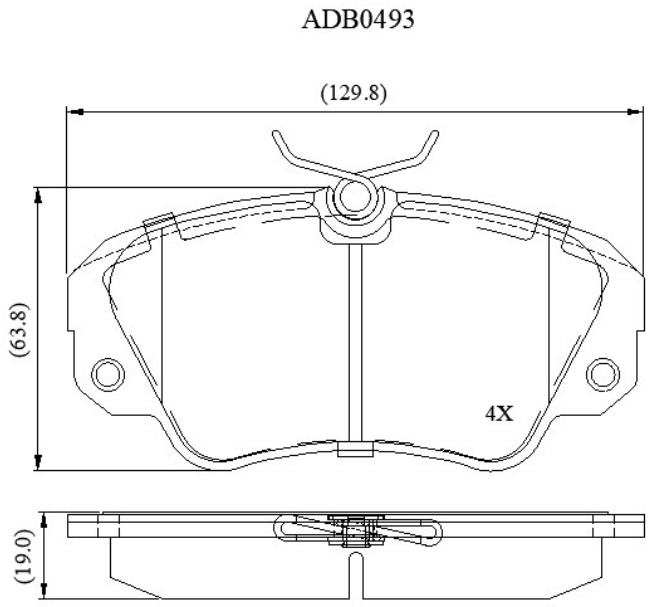

Specifications

Fitting Position	:	Front

Model Date	:	06/97->
Or. Caliper	:	Lucas
WVA	:	21368
FMSI	:	
Length	:	129.5
Width	:	64
Thickness	:	19