ALLIED NIPPON PRIVATE LIMITED
(Formerly known as Allied Nippon Ltd.)
CIN : U34300DL1988PTC030910

Make: VAUXHALL

Model: ZAFIRA Mk III

Part Number: ADB32930

Vehicle Manufacturing/Engine:

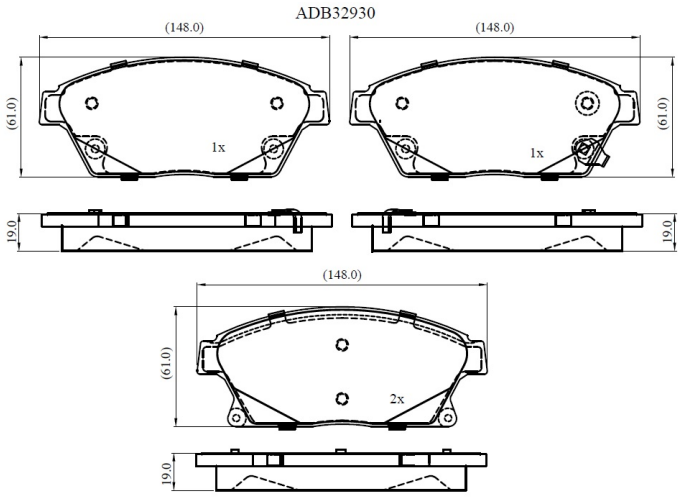

Specifications

Fitting Position	:	Front
Model Date	:	2011-2018
Or. Caliper	:	
WVA	:	25034

FMSI	:
Length	:
Width	:
Thickness	: