Make: VOLKSWAGEN

Model: Beetle

Part Number: ADB12871

Vehicle Manufacturing/Engine:

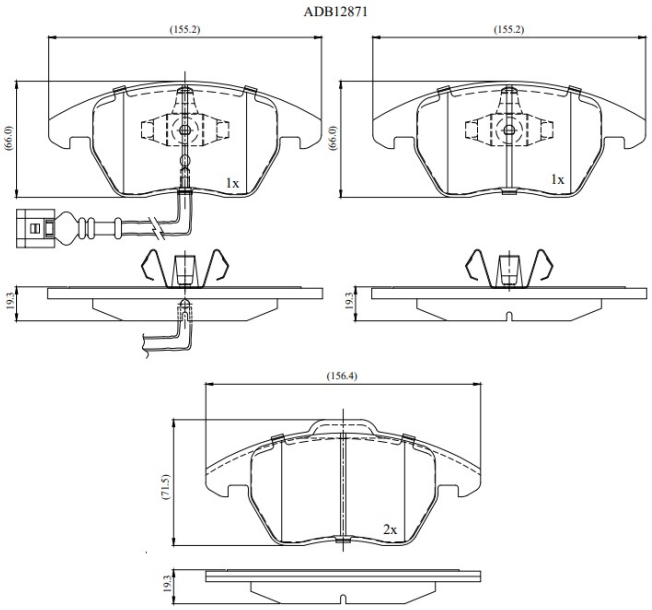

Specifications

Fitting Position	:	Front
Model Date	:	Dec-13

Or. Caliper	:	
WVA	:	
FMSI	:	8212-D1107
Length	:	155.2/156.4
Width	:	66/71.5
Thickness	:	19.3