Make: VOLKSWAGEN

Model: Bora

Part Number: ADB1797

Vehicle Manufacturing/Engine:

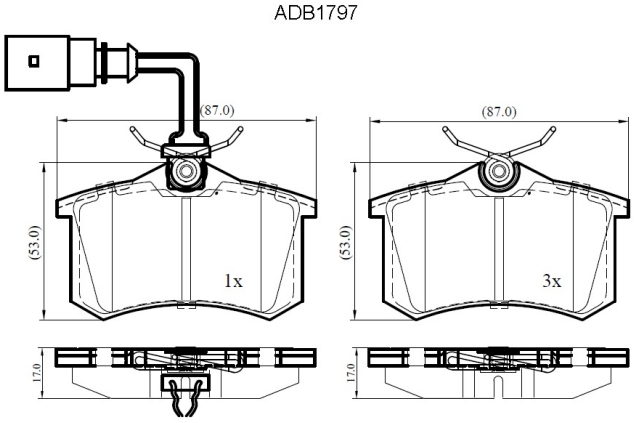

Specifications

Fitting Position	:	Rear
Model Date	:	10/98->
Or. Caliper	:	Lucas
WVA	:	2,09,61,23,554

FMSI	:	
Length	:	87
Width	:	53
Thickness	:	17