Make: VOLKSWAGEN

Model: CALIFORNIA T6 Camper

Part Number: ADB23303

Vehicle Manufacturing/Engine:

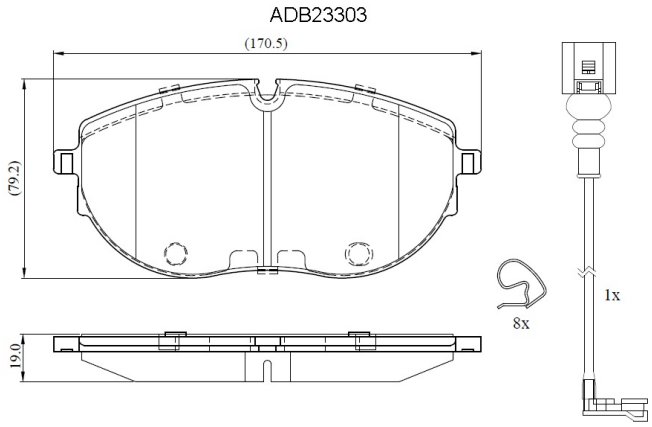

Specifications

Fitting Position	:	Front
Model Date	:	2015-
Or. Caliper	:	
WVA	:	26270

FMSI	:	
Length	:	170.5
Width	:	79.2
Thickness	:	19