Make: VOLKSWAGEN

Model: Caravelle(T4->96)

Part Number: ADB1419

Vehicle Manufacturing/Engine:

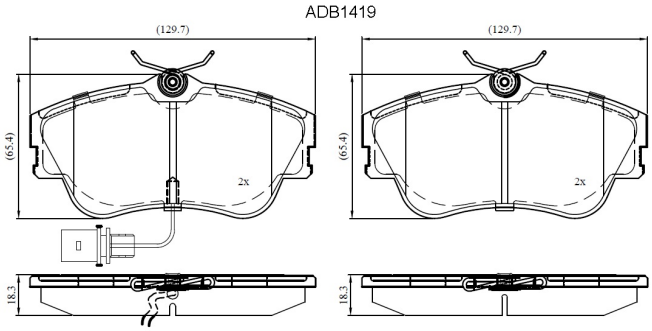

Specifications

Fitting Position	:	Front
Model Date	:	05/96->
Or. Caliper	:	Lucas
WVA	:	21479
FMSI	:	
Length	:	129.7

Width	:	65.4
Thickness	:	18.3