Make: VOLKSWAGEN

Model: Caravelle(T4->96)

Part Number: ADB1874

Vehicle Manufacturing/Engine:

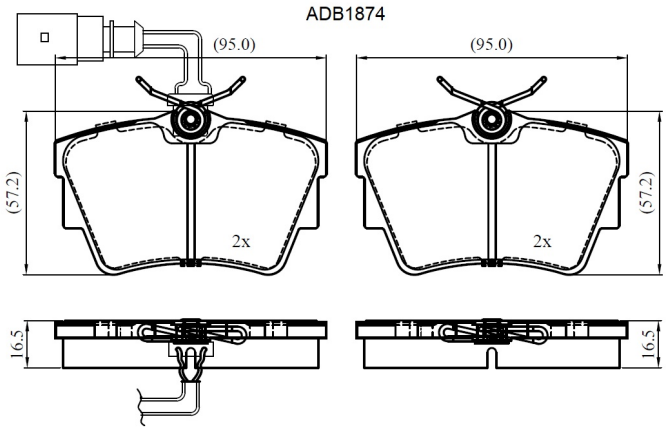

Specifications

Fitting Position	:	Rear
Model Date	:	03/98->
Or. Caliper	:	Lucas
WVA	:	23224
FMSI	:	

Length	:	94.8
Width	:	57
Thickness	:	16.5