Make: VOLKSWAGEN

Model: CRAFTER Van

Part Number: ADB02845

Vehicle Manufacturing/Engine:

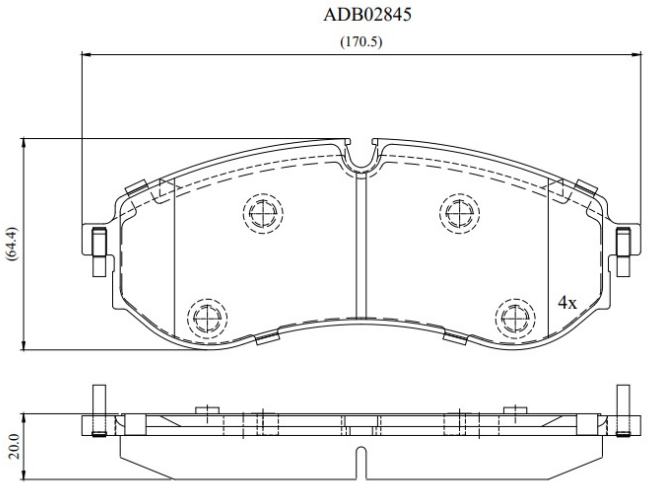

Specifications

Fitting Position	:	Rear
Model Date	:	2017-
Or. Caliper	:	

WVA	:	22492
FMSI	:	
Length	:	170.7
Width	:	64.2
Thickness	:	19.9