Make: VOLKSWAGEN

Model: Golf Mk IV

Part Number: ADB0737

Vehicle Manufacturing/Engine:

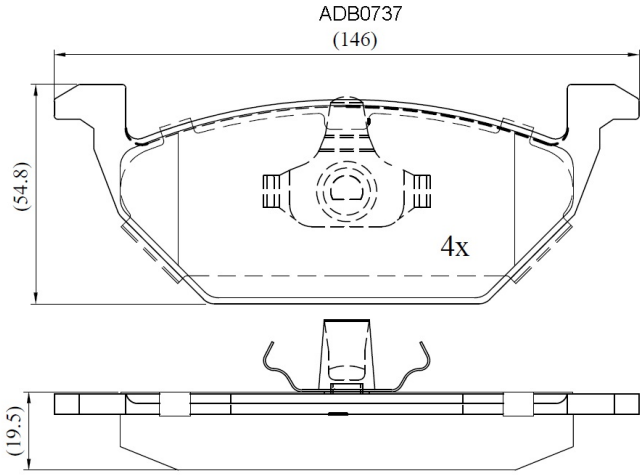

Specifications

Fitting Position	:	Front
Model Date	:	10/98->
Or. Caliper	:	Ate
WVA	:	23130

FMSI	:	
Length	:	146
Width	:	54.8
Thickness	:	20