Make: VOLKSWAGEN

Model: Golf Mk IV

Part Number: ADB0797

Vehicle Manufacturing/Engine:

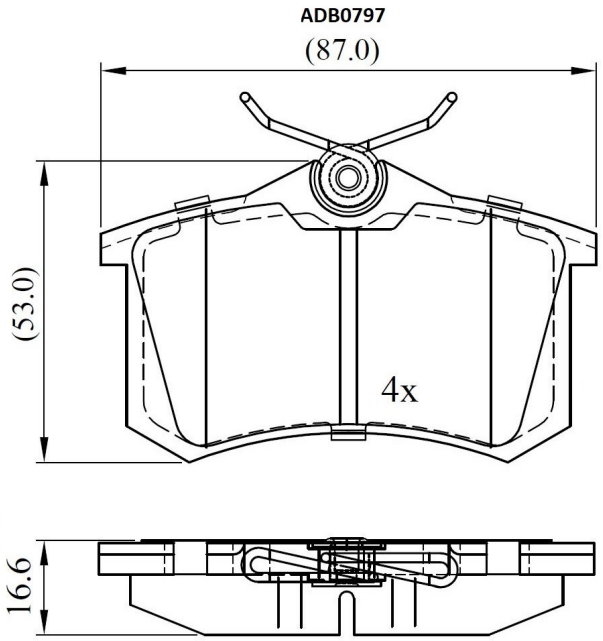

Specifications

Fitting Position	:	Rear

Model Date	:	10/98->
Or. Caliper	:	Lucas
WVA	:	20961
FMSI	:	
Length	:	87
Width	:	53
Thickness	:	17