Make: VOLKSWAGEN

Model: Golf Mk IV

Part Number: ADB11111

Vehicle Manufacturing/Engine:

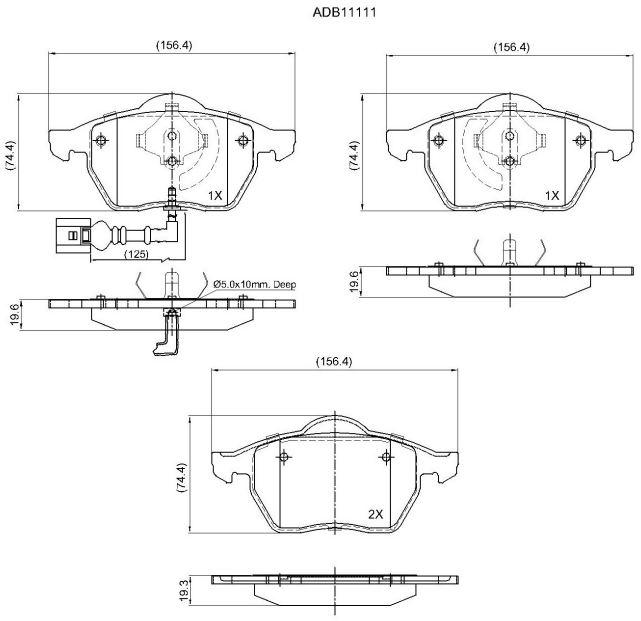

Specifications

Fitting Position	:	Front

Model Date	:	10/98->
Or. Caliper	:	Ate
WVA	:	23,39,22,06,76,20,911
FMSI	:	
Length	:	156.4
Width	:	74.0/74.5
Thickness	:	19.6/19.3