## Make: VOLKSWAGEN

## Model: Golf Mk IV

## Part Number: ADB11111

## Vehicle Manufacturing/Engine:

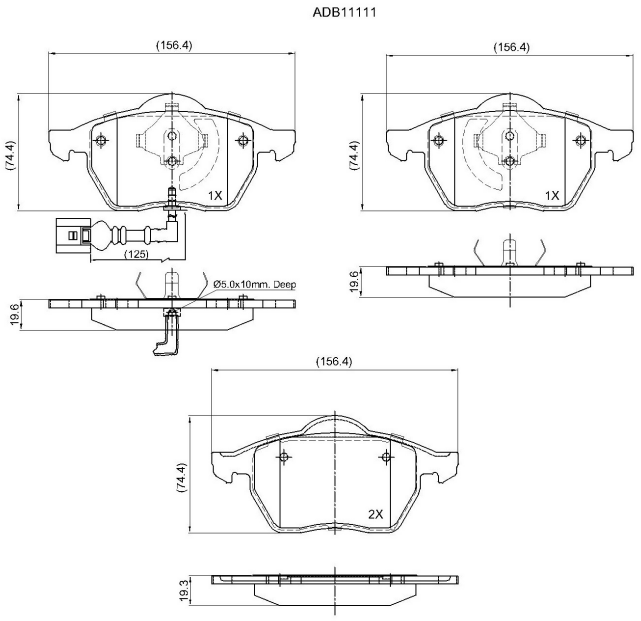


### Specifications

| | | |
|---|---|---|
| **Fitting Position** | : | Front |

| | | |
|---|---|---|
| **Model Date** | : | 10/98-> |
| **Or. Caliper** | : | Ate |
| **WVA** | : | 23,39,22,06,76,20,911 |
| **FMSI** | : | |
| **Length** | : | 156.4 |
| **Width** | : | 74.0/74.5 |
| **Thickness** | : | 19.6/19.3 |