Make: VOLKSWAGEN

Model: GOLF VI Convertible

Part Number: ADB13287

Vehicle Manufacturing/Engine:

ADB13287

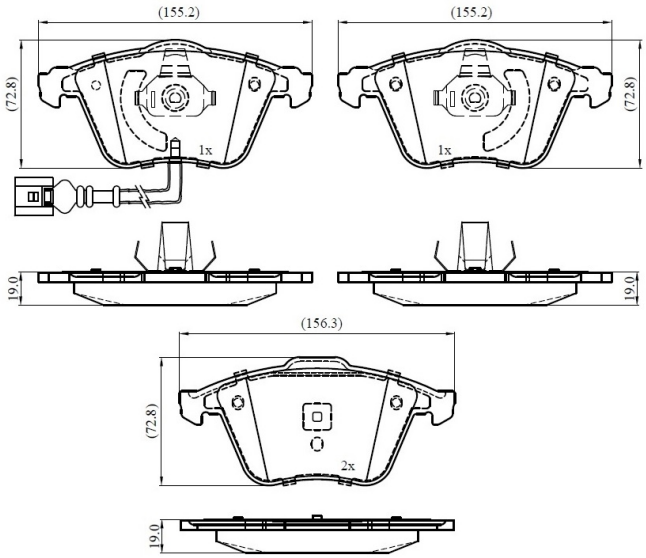

Specifications

Fitting Position	:	Front
Model Date	:	2013-2016

Or. Caliper	:	
WVA	:	23913
FMSI	:	
Length	:	155.2/156.3
Width	:	72.8
Thickness	:	19