Make: VOLKSWAGEN

Model: GOLF VII

Part Number: ADB12158

Vehicle Manufacturing/Engine:

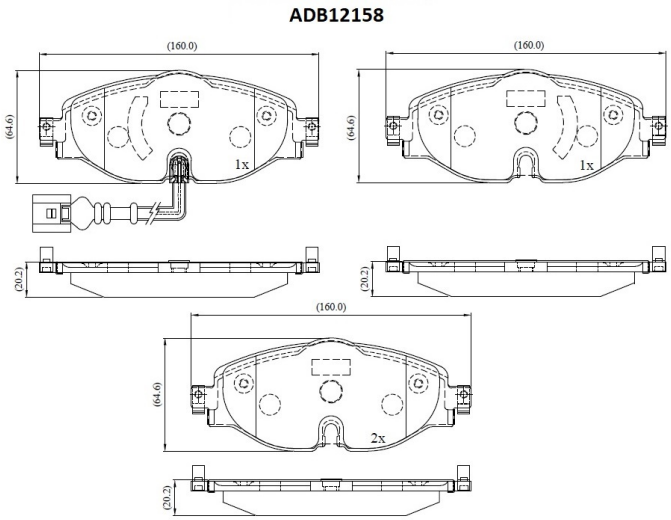

Specifications

Fitting Position	:	Front
Model Date	:	11/12-
Or. Caliper	:	TRW

WVA	:	25086, 25683,25731
FMSI	:	
Length	:	160
Width	:	64.6
Thickness	:	20.2