Make: VOLKSWAGEN

Model: GOLF VII

Part Number: ADB12224

Vehicle Manufacturing/Engine:

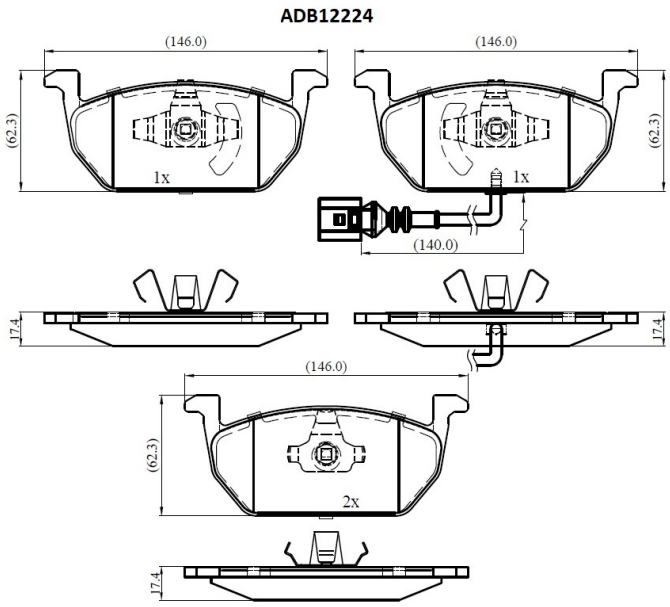

Specifications

Fitting Position	:	Front
Model Date	:	05/15-

Or. Caliper	:	
WVA	:	2,20,35,22,036
FMSI	:	
Length	:	146
Width	:	62.3
Thickness	:	17.4