Make: VOLKSWAGEN

Model: PASSAT B8

Part Number: ADB13191

Vehicle Manufacturing/Engine:

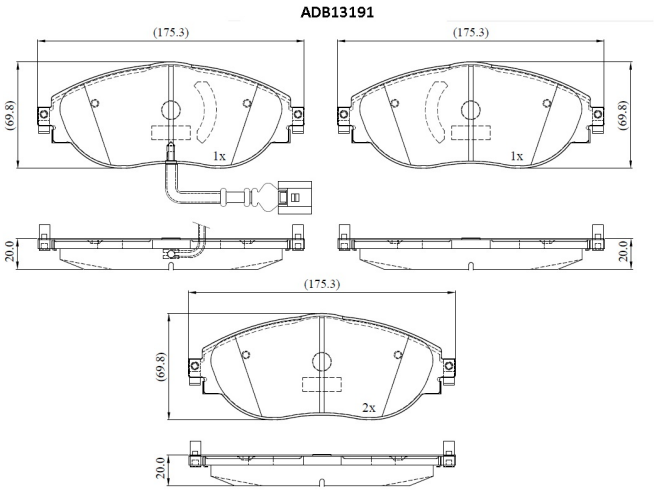

Specifications

Fitting Position	:	Front
Model Date	:	2015-
Or. Caliper	:	

WVA	:	24738
FMSI	:	
Length	:	175.3
Width	:	69.8
Thickness	:	20