Make: VOLKSWAGEN

Model: Passat Mk IV

Part Number: ADB0511

Vehicle Manufacturing/Engine:

ADB0511

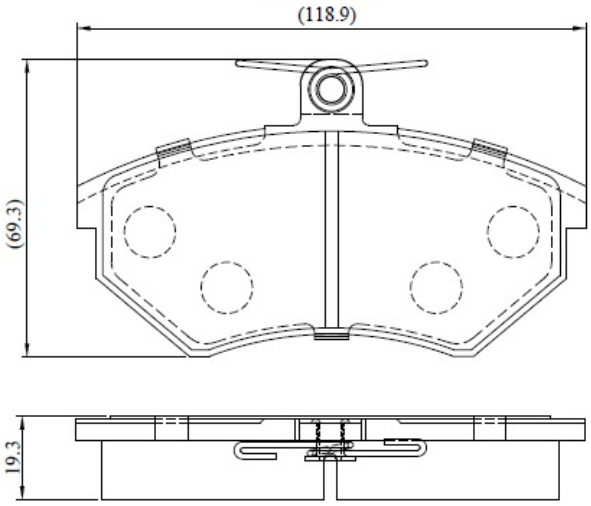

Specifications

Fitting Position	:	Front
Model Date	:	10/93-01/97

Or. Caliper	:	Lucas
WVA	:	20168
FMSI	:	
Length	:	118.9
Width	:	69.3
Thickness	:	19.3