Make: VOLKSWAGEN

Model: Passat Mk V

Part Number: ADB11025

Vehicle Manufacturing/Engine:

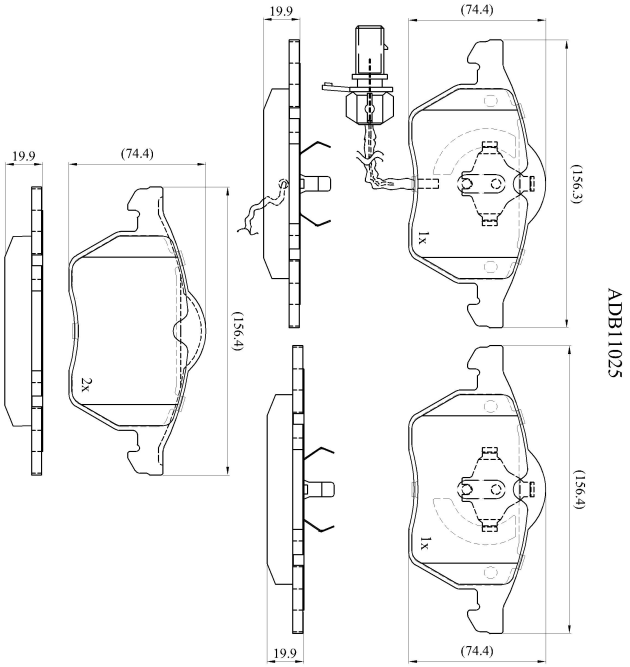

Specifications

Fitting Position	:	Front
Model Date	:	01/97-12/00
Or. Caliper	:	Ate
WVA	:	21849
FMSI	:	
Length	:	156.4
Width	:	74.4/74.5
Thickness	:	19.3