**Make: VOLKSWAGEN**

**Model: Passat Mk VI**

**Part Number: ADB0797**

**Vehicle Manufacturing/Engine:**

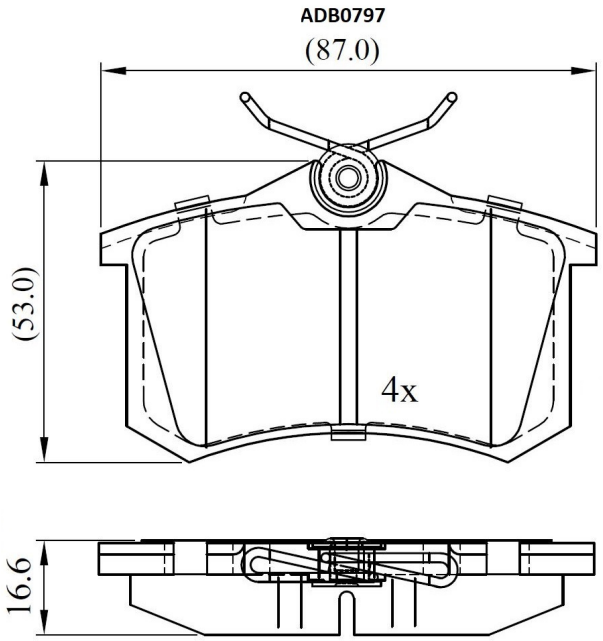


**Specifications**

| | | |
|---|---|---|
| **Fitting Position** | : | Rear |

| | | |
|---|---|---|
| **Model Date** | : | 12/00-> |
| **Or. Caliper** | : | Lucas |
| **WVA** | : | 20961 |
| **FMSI** | : | |
| **Length** | : | 87 |
| **Width** | : | 53 |
| **Thickness** | : | 17 |