ALLIED NIPPON PRIVATE LIMITED
(Formerly known as Allied Nippon Ltd.)
CIN : U34300DL1988PTC030910

Make: VOLKSWAGEN

Model: SCIROCCO

Part Number: ADB0101

Vehicle Manufacturing/Engine:

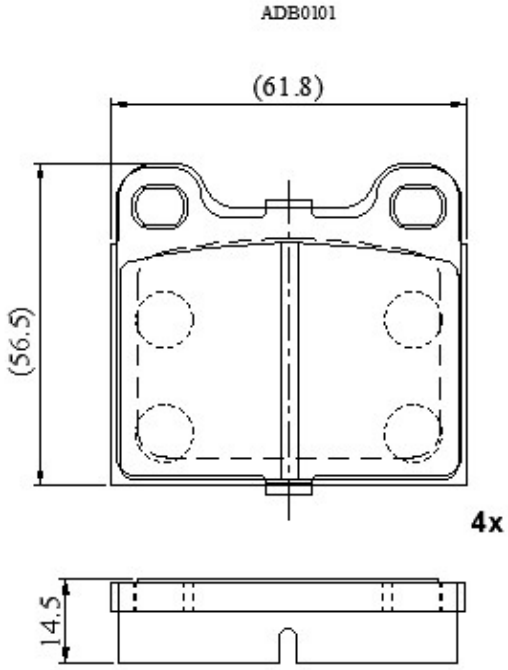

Specifications

Fitting Position	:	Front
Model Date	:	01/78-01/84
Or. Caliper	:	Ate
WVA	:	20228
FMSI	:	
Length	:	61.8
Width	:	56.5
Thickness	:	15