Make: VOLKSWAGEN

Model: SCIROCCO

Part Number: ADB0104

Vehicle Manufacturing/Engine:

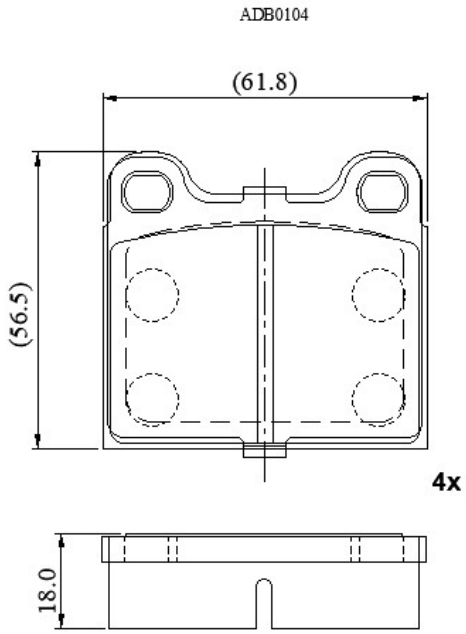

Specifications

Fitting Position	:	Front
Model Date	:	01/74-01/78
Or. Caliper	:	Ate
WVA	:	20228
FMSI	:	
Length	:	61.8
Width	:	56.5
Thickness	:	18