Make: VOLKSWAGEN

Model: Touareg

Part Number: ADB02979

Vehicle Manufacturing/Engine:

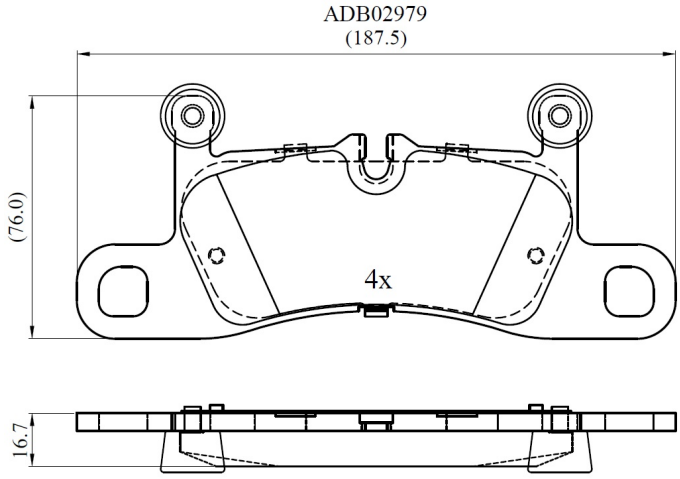

Specifications

Fitting Position	:	Rear
Model Date	:	2010-2018
Or. Caliper	:	
WVA	:	24721

FMSI	:
Length	:
Width	:
Thickness	: