Make: VOLKSWAGEN

Model: TRANSPORTER / CARAVELLE Mk V Bus

Part Number: ADB12964

Vehicle Manufacturing/Engine:

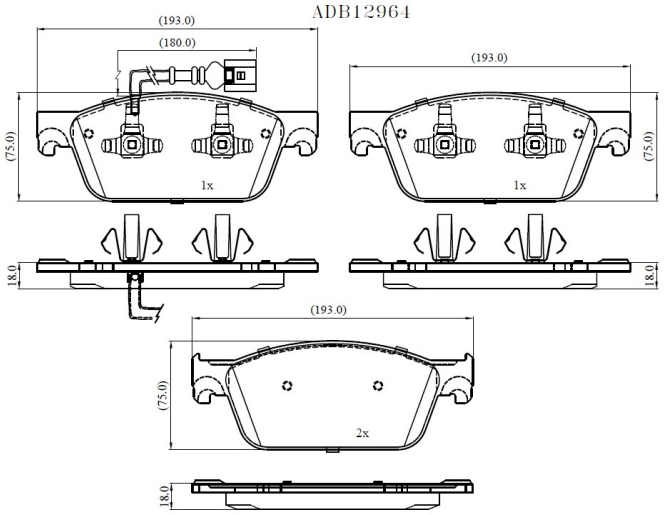

Specifications

Fitting Position	:	Front
Model Date	:	2009-2015
Or. Caliper	:	

WVA	:	24623
FMSI	:	
Length	:	
Width	:	
Thickness	:	