Make: VOLKSWAGEN

Model: TRANSPORTER / CARAVELLE Mk V Bus

Part Number: ADB13123

Vehicle Manufacturing/Engine:

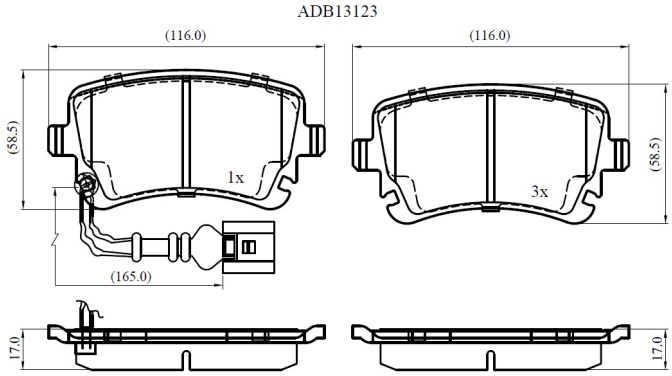

Specifications

Fitting Position	:	Rear
Model Date	:	2003-2009
Or. Caliper	:	
WVA	:	23326,23882
FMSI	:	

Length	:	116
Width	:	58.5
Thickness	:	17