Make: VOLKSWAGEN

Model: TRANSPORTER / CARAVELLE Mk V Bus

Part Number: ADB13185

Vehicle Manufacturing/Engine:

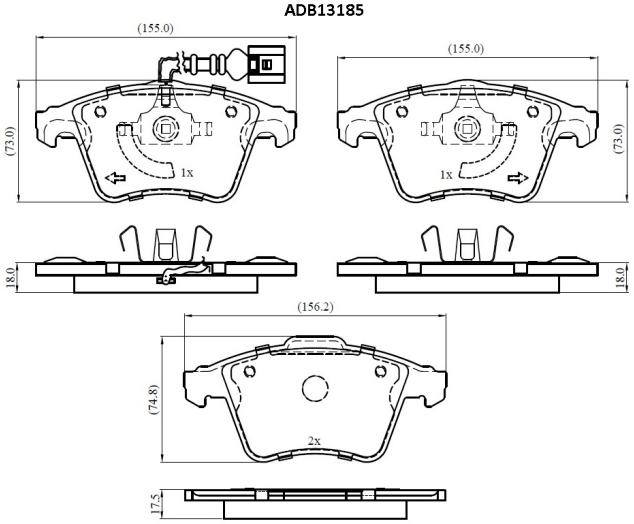

Specifications

Fitting Position	:	Front
Model Date	:	2011-2015
Or. Caliper	:	

WVA	:	23746
FMSI	:	
Length	:	155.0/156.2
Width	:	73.0/74.8
Thickness	:	18.0/17.5