Make: VOLKSWAGEN

Model: Transporter (T4 ->96)

Part Number: ADB0272

Vehicle Manufacturing/Engine:

ADB0272

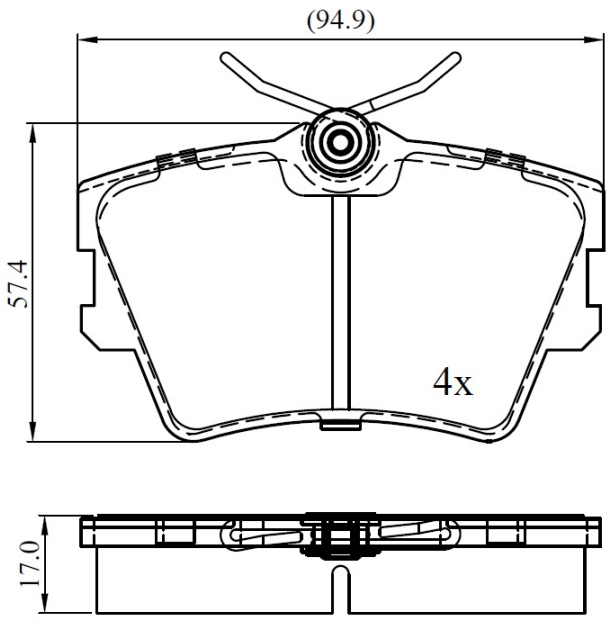

Specifications

Fitting Position	:	Rear
Model Date	:	01/90-05/96
Or. Caliper	:	Lucas
WVA	:	21882
FMSI	:	
Length	:	94.9
Width	:	57.4
Thickness	:	17