## Make: VOLKSWAGEN

## Model: Transporter (T4 96->)

## Part Number: ADB1419

## Vehicle Manufacturing/Engine:

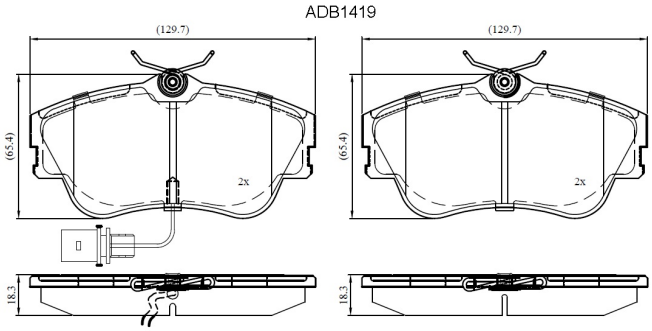


### Specifications

| | | |
|---|---|---|
| **Fitting Position** | : | Front |
| **Model Date** | : | 05/96-> |
| **Or. Caliper** | : | Lucas |
| **WVA** | : | 21479 |
| **FMSI** | : | |
| **Length** | : | 129.7 |

| | | |
|---|---|---|
| **Width** | : | 65.4 |
| **Thickness** | : | 18.3 |